KETEC®

Precision Meets Perfection,
Economical Solutions.

2025

Trumpf® Style Punch Tooling Catalog

Visit us: www. ketectooling.com

“Precision Meets Perfection, Economical Solutions.”

About Us

Innovative Solutions for Fabrication Challenges

Founded in 1998, KETEC Precision Tooling is the **largest manufacturer of Punch Press and Press Brake tooling in China and Asia.**

With over 25 years of unremitting efforts in product innovation and development, as well as manufacturing refinement - In 2010, our Punch Press and Press Brake tools were appointed by the government as the industrial standard in China. As the leader of CNC tooling for the sheet metal fabrication industry. Our products have always been well-known **high-quality**, **customer-centric**, and **cost-effective**.

Empowering Metal Fabricators with Top-notch Tooling Solutions

Staying competitive in the manufacturing industry means having better flexibility, quality and efficiency while maintaining a sustainable profit.

That's why many manufacturers choose us. Through our unwavering co mmitment to quality control, refined manufacturing processes, and consultative customer service, we partner with our customers to minimize costs, boost revenue, and sustain their competitive edge.

Milestones

2004

Obtained Certifications

KETEC®'s trademark was registered as an international trademark and obtained ISO certification - **ISO9000:2000**.

2008

Equipped with High Capacity

Experienced tremendous growth and built our current manufacturing facilities **encompassing a total of 13 acres** in Conghua, Guangzhou, China.

2010

Became National Standard

The National Standardization Committee of China **commissioned KETEC to draft the standard** for "Tooling for CNC Turret Punch Machine." In July of the same year, the Ministry of Industry and IT of China issued and implemented the standard **JB/T10928-2010** for "CNC Turret Punch Press Tooling."

2012

Largest in Asia

KETEC became the **largest exporter by volume** and manufacturer of CNC sheet metal tooling in Asia with an annual revenue of **$45 Million USD**.

2020

Customer Centric

Implemented both **ERP and CRM software** company-wide to better serve our customers.

Official OEMS Partners

Yawei 亚威
YANGLI
JFY
Tailift
YSD LVD-HD
Accurpress
Prima Power

Customer Highlight

SANMINA
FOTILE
伟创力集团 FLEXTRONICS
HITACHI 日立电梯(中国)有限公司
BYD
trend
Haier 海尔
美的 Midea
thyssenkrupp
GREE 格力
Panasonic 松下电器
HONDA
Schneider Electric 施耐德电气
OTIS 奥的斯电梯

KETEC Agents

Our agents are established in more than 25 countries worldwide

Facilities Gallery

Ordering Workshop

Heat-Treatment Center

Standard Production Line

Customized Line

Tooling Test Center

Quality Control Lab

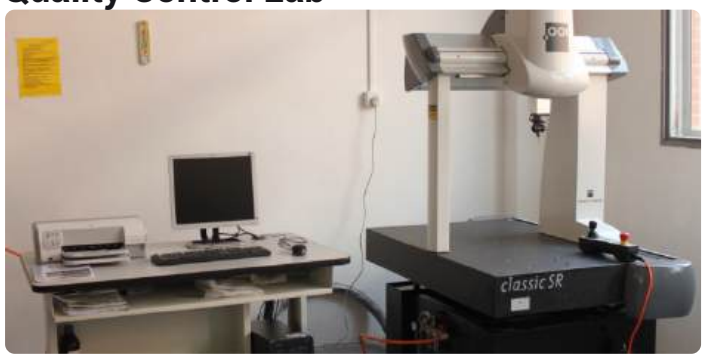

Product Offerings

We specialize in sheet metal fabrication tooling, including **Punch Press, Press Brake, Stamping tools and related machines.**

Punch Press Tooling

- Thick Turret Tooling
- Thin Turret Tooling
- TRUMPF® Style Tooling
- Salvagnini®
- Muratec-Wiedemann®

Stamping Tools

- Automotive
- Thick Plate
- Copper Plate

Press Brake Tooling

- Euro-Amada® Style
- Wila®-Trumpf® Style

Machines

- Tool Grinding Machine
- 2D Inspection Machine

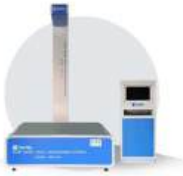

Table of Contents

Standard Tools ---------- 10

Multi-Swap Series ---------- 15

Multi Tool ---------- 18

Slitting ---------- 22

Self Stripping ---------- 24

Quick-Align ---------- 25

Heavy Duty ---------- 25

Fully Guided ---------- 26

Forming ---------- 28

Accessories ---------- 52

Technical Information ---------- 54

Trumpf® Style Punch Tooling

Trumpf® Style Precision Punch Tooling

Ketec's Trumpf® style press tooling is engineered for precision, durability and full compatibility with Trumpf® machines. Made from premium tool steels and enhanced with advanced heat treatment and coatings, our tools deliver excellent wear resistance and long service life. Designed for seamless interchangeability, they ensure reliable, high-volume production with tight tolerances and consistent quality.

STANDARD TOOLS

PUNCHES

Size 0A / 0B | Size I | Size II A | Size II B | Size II C | Size II D

SIZE 0A/0B PUNCHES

SIZE 0A / 0B PUNCHES

Size	A Dimension	Insert Height	Geometry	Standard	Add On	
					KPM	TiCN
0A	1.00 mm ~ 6.00 mm [0.039" ~ 0.236"]	60.00 mm [2.362"]	Round	T0A.P1SRO.		
			Shape	T0A.P1S**.		
		63.00 mm [2.480"]	Round	T0A.P1RO.		
			Shape	T0A.P1**.		
0B	6.01 mm ~ 10.50 mm [0.236" ~ 0.413"]	60.00 mm [2.362"]	Round	T0B.P1SRO.		
			Shape	T0B.P1S**.		
		63.00 mm [2.480"]	Round	T0B.P1RO.		
			Shape	T0B.P1**.		

SIZE I PUNCHES

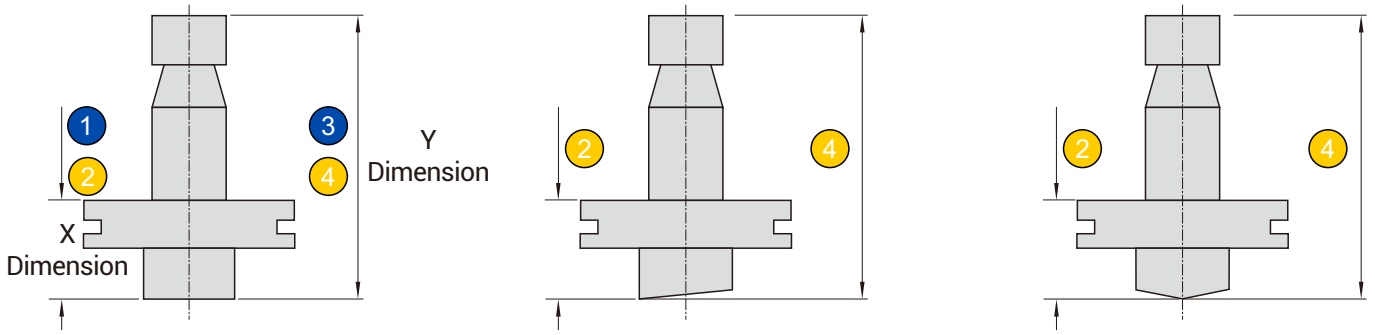

Standard (Flat) **Whisper** **Rooftop**

Total Length	X Dimension	Y Dimension
H74 (Short Punches)	1 34.30 mm [1.350"]	3 74.00 mm [2.913"]
H77 (Standard Punches)	2 37.80 mm [1.469"]	4 77.50 mm [3.051"]

SIZE I PUNCHES

A Dimension	Height	Geometry	Standard	Shear		Add On	
				Whisper	Rooftop	KPM	TiCN
2.00 mm ~ 30.00 mm [0.078" ~ 1.181"]	74.00 mm [2.913"]	Round	T1X.P1SRO.	N/A			
		Shape	T1X.P1S**.				
	77.50 mm [3.051"]	Round	T1X.P1RO.				
		Shape	T1X.P1**.				

SIZE II PUNCHES

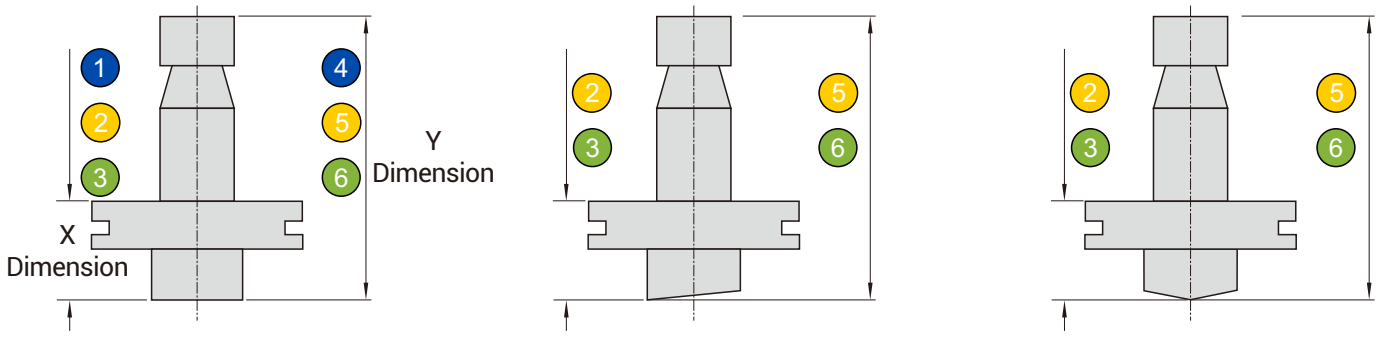

Flat **Whisper (Standard)** **Rooftop**

Total Length	H74 (Short Punches)	X Dimension	1 34.30 mm [1.350"]	Y Dimension	4 74.00 mm [2.913"]
	H77 (Standard Punches)		2 36.80 mm [1.449"]		5 77.00 mm [3.031"]
	H77.5 (Long Punches)		3 37.30 mm [1.469"]		6 77.50 mm [3.051"]

SIZE II PUNCHES

Size	A Dimension	Height	Geometry	Whisper (Standard)	Shear		Add On	
					Flat	Rooftop	KPM	TiCN
II A	30.46 mm [1.199"] ~ 40.00 mm [1.574"]	74.00 mm [2.913"]	Round		N/A			
			Shape					
		77.00 mm [3.031"]	Round	T2A.P1RO.				
			Shape	T2A.P1**.				
		77.50 mm [3.051"]	Round					
			Shape					
II B	40.01 mm [1.1574"] ~ 50.80 mm [2.000"]	74.00 mm [2.913"]	Round		N/A			
			Shape					
		77.00 mm [3.031"]	Round	T2B.P1RO.				
			Shape	T2B.P1**.				
		77.50 mm [3.051"]	Round					
			Shape					
II C	50.81 mm [2.000"] ~ 60.00 mm [2.362"]	74.00 mm [2.913"]	Round		N/A			
			Shape					
		77.00 mm [3.031"]	Round	T2C.P1RO.				
			Shape	T2C.P1**.				
		77.50 mm [3.051"]	Round					
			Shape					
II D	60.01 mm [2.362"] ~ 76.2 mm [3.000"]	74.00 mm [2.913"]	Round		N/A			
			Shape					
		77.00 mm [3.031"]	Round	T2D.P1RO.				
			Shape	T2D.P1**.				
		77.50 mm [3.051"]	Round					
			Shape					

STRIPPER PLATES

STANDARD STRIPPER PLATES		
Geometry	**Old Style**	**New Style**
Round	T1X.S2RO.	T1X.S1RO.
Shape	T1X.S2**.	T1X.S1**.
Stripper Pin	P.JX-TKS	

New Style

Old Style

DIES

STANDARD DIES			
Size	**Geometry**	**Standard**	**SKH-51 / M2**
Size I	Round	T1X.D1RO.	
	Shape	T1X.D1**.	
Size II	Round	T2X.D1RO.	
	Shape	T2X.D1**.	

MULTI-SWAP SERIES

PUNCH HOLDERS

MULTI-SWAP PUNCH HOLDERS

Code No.	Description	Parameters
TZH.P6	Multi-Swap punch holder A	
TZH.P7	Multi-Swap punch holder B	
TZH.P8	Multi-Swap punch shim A	
TZH.P9	Multi-Swap punch shim B	

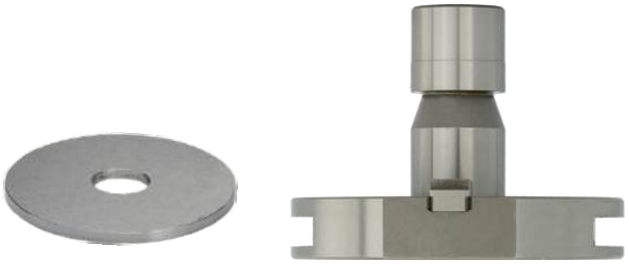

PUNCH HOLDERS PARTS

REPLACEMENT PARTS

No.	Code No.	Description
1	P.DQ8	Retaining ring
2	P.M8*40A	Socket head cap screw
3	P.M3*12B	Head Screw
4	TZH.P0	Punch body location key
5		
6		
7	TZH.P6 / P7	Multi-Swap punch holder A / B
8	TZH.P8 / P9	Multi-Swap punch shim A / B

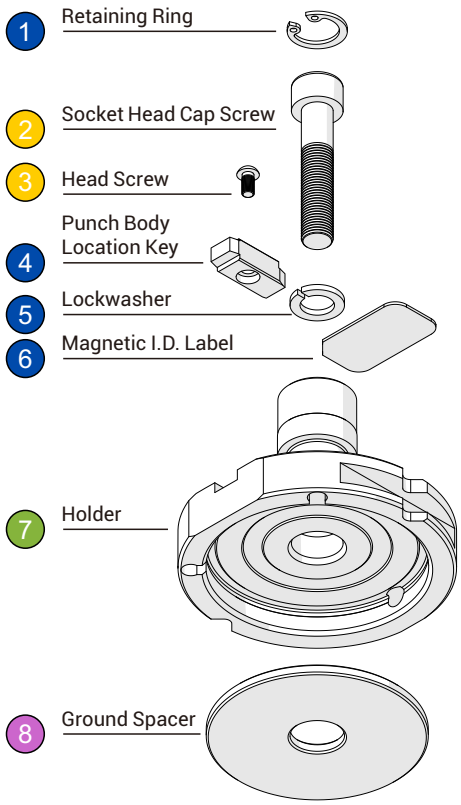

DIE HOLDERS

MULTI-SWAP DIE HOLDERS

Code No.	Description	Parameters
TZH.D3	Multi-Swap die holder A	
TZH.D4	Multi-Swap die holder B	
TZH.D5	Multi-Swap die shim A	
TZH.D6	Multi-Swap die shim B	

KETEC®

PUNCHES

A1

A2

Multi-Swap Punch Insert (A)

Multi-Swap Punch Holder A

Multi-Swap Punch Assembly A1 / A2

Multi-Swap Punch Insert (B)

B1

B2

B3

Multi-Swap Punch Holder B

Multi-Swap Punch Assembly B1 / B2 /B3

MULTI-SWAP PUNCHES

Size	A Dimension	Geometry	Standard	Shear		Add On	
				Whisper	Rooftop	KPM	TiCN
A1	1.00 mm ~ 30.00 mm [0.039" ~ 1.181"]	Round	TZH.P1RO.				
		Shape	TZH.P1**.				
A2	30.01 mm ~ 40.00 mm [1.181" ~ 1.575"]	Round	TZH.P2RO.				
		Shape	TZH.P2**.				
B1	40.01 mm ~ 56.00 mm [1.575" ~ 2.205"]	Round	TZH.P3RO.				
		Shape	TZH.P3**.				
B2	56.01 mm ~ 66.00 mm [2.205" ~ 2.600"]	Round	TZH.P4RO.				
		Shape	TZH.P4**.				
B3	66.01 mm ~ 76.20 mm [2.600" ~ 3.000"]	Round	TZH.P5RO.				
		Shape	TZH.P5**.				

DIES

Die Holder A

Die Holder B

A Dimension Diagram

MULTI-SWAP SERIES DIES

Size	A Dimension	Geometry	Code No.
Size A	1 mm ~ 40.00 mm [0.039" ~ 1.575"]	Round	TZH.D1RO.
		Shape	TZH.D1**.
Size B	40.01 mm ~ 56.00 mm [1.575" ~ 2.205"]	Round	TZH.D2RO.
		Shape	TZH.D2**.

MULTI-TOOL 5 STATION

MULTI-TOOL 5 STATION PUNCH ASSEMBLY		
Parts	**Code No.**	
Punch Holder	TM5.A1	
Parts	**A Dimension**	**Code No.**
Punch Insert	Round / 1 ~ 1.56 mm [0.039" ~ 0.061"]	TM5.P1RO-A.
	Round / 1.57 ~ 2.34 mm [0.061" ~ 0.092"]	TM5.P1RO-B.
	Round / 2.35 ~ 16.00 mm [0.092" ~ 0.630"]	TM5.P1RO-C.
	Shape / Short size < 2 mm [0.079"]	TM5.P1**-A.
	Shape / Short size ≥ 2 mm [0.079"]	TM5.P1**-B.

Maximum dimension of each punch insert is 16 mm [0.630"]. Add on TiCN and KPM.

MULTI-TOOL 5 STATION DIE ASSEMBLY	
Parts	**Code No.**
Die Holder	TM5.B1
Round Insert	TM5.D1RO.
Shape Insert	TM5.D1**.

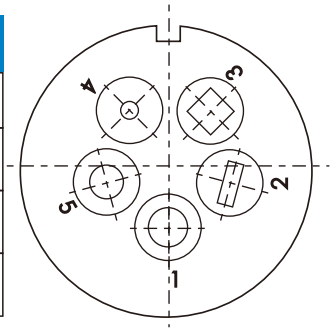

Punch and die will be made in 90 degree (Position . 1)

STRIPPER PLATE	
Parts	**Code No.**
Stripper Plate	TM5.S1

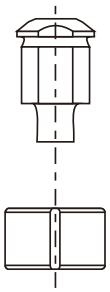

MULTI-TOOL 10 STATION

MULTI-TOOL 10 STATION PUNCH ASSEMBLY

Parts	Code No.	
Punch Holder	TM0.A1	
Parts	**A Dimension**	**Code No.**
Punch Insert	Round / 1 ~ 1.56 mm [0.039" ~ 0.061"]	TM0.P1RO-A.
	Round / 1.57 ~ 2.34 mm [0.061" ~ 0.092"]	TM0.P1RO-B.
	Round / 2.35 ~ 10.50 mm [0.092" ~ 0.413"]	TM0.P1RO-C.
	Shape / Short size < 2 mm [0.079"]	TM0.P1**-A.
	Shape / Short size ≥ 2 mm [0.079"]	TM0.P1**-B.

Maximum dimension of each punch insert is 10.50 mm [0.413"]. Add on TiCN and KPM.

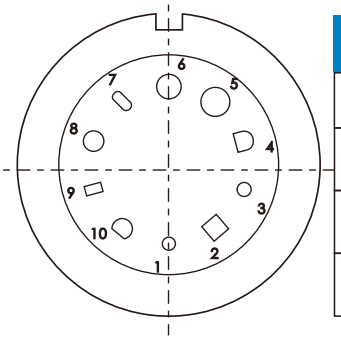

MULTI-TOOL 10 STATION DIE ASSEMBLY

Parts	Code No.
Die Holder	TM0.B1
Round Insert	TM0.D1RO.
Shape Insert	TM0.D1**.

Punch and die will be made in 90 degree (Position . 1)

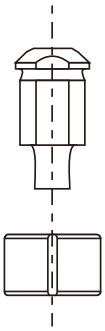

STRIPPER PLATE

Parts	Code No.
Stripper Plate	TM0.S1**.

MULTI-TOOL 2 STATION

MULTI-TOOL 2 STATION PUNCH ASSEMBLY		
Parts	**Code No.**	
Punch Holder		
Parts	**A Dimension**	**Code No.**
Punch Insert	Round / 1 ~ 1.56 mm [0.039" ~ 0.061"]	TM2.P1RO-A.
	Round / 1.57 ~ 2.34 mm [0.061" ~ 0.092"]	TM2.P1RO-B.
	Round / 2.35 ~ 24.00 mm [0.092" ~ 0.945"]	TM2.P1RO-C.
	Shape / Short size < 2 mm [0.079"]	TM2.P1**-A.
	Shape / Short size ≥ 2 mm [0.079"]	TM2.P1**-B.

Maximum dimension of each punch insert is 24 mm [0.945"]

MULTI-TOOL 2 STATION DIE	
Parts	**Code No.**
Round + Round	TM2.D1RO.
Round + Shape	TM2.D1RO**.
Shape + Shape	TM2.D1****.

Trumpf Size II Die (Cluster Style)

STRIPPER PLATE	
Parts	**Code No.**
Stripper Plate	TM2.S1

MULTI-TOOL 4 STATION

MULTI-TOOL 4 STATION PUNCH INSERTS

Parts	A Dimension	Code No.
Punch Insert	Round / 1 ~ 1.56 mm [0.039" ~ 0.061"]	TM4.P1RO-A.
	Round / 1.57 ~ 2.34 mm [0.061" ~ 0.092"]	TM4.P1RO-B.
	Round / 2.35 ~ 16.00 mm [0.092" ~ 0.630"]	TM4.P1RO-C.
	Shape / Short size < 2 mm [0.079"]	TM4.P1**-A.
	Shape / Short size ≥ 2 mm [0.079"]	TM4.P1**-B.

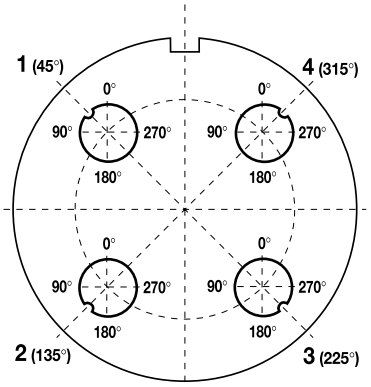

Maximum dimension of each punch insert is 16 mm [0.630"]. Add on TiCN and KPM.

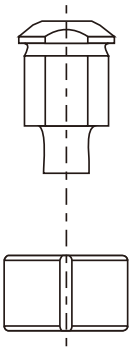

MULTI-TOOL 4 STATION DIE INSERTS

Parts	Code No.
Round Insert	TM4.D1RO.
Shape Insert	TM4.D1**

MULTI-TOOL 6 STATION

MULTI-TOOL 6 STATION PUNCH INSERTS

Parts	A Dimension	Code No.
Punch Insert	Round / 1 ~ 1.56 mm [0.039" ~ 0.061"]	TM6.P1RO-A.
	Round / 1.57 ~ 2.34 mm [0.061" ~ 0.092"]	TM6.P1RO-B.
	Round / 2.35 ~ 16.00 mm [0.092" ~ 0.630"]	TM6.P1RO-C.
	Shape / Short size < 2 mm [0.079"]	TM6.P1**-A.
	Shape / Short size ≥ 2 mm [0.079"]	TM6.P1**-B.

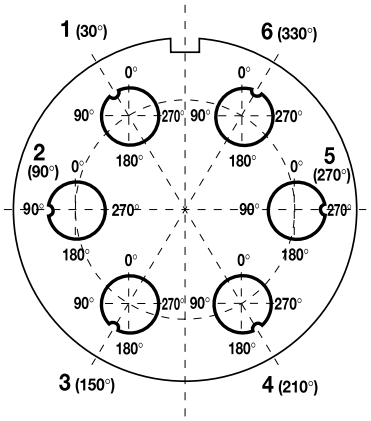

Maximum dimension of each punch insert is 10.50 mm [0.413"]. Add on TiCN and KPM.

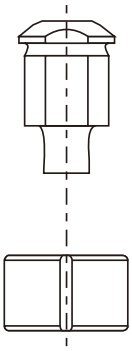

MULTI-TOOL 6 STATION DIE INSERTS

Parts	Code No.
Round Insert	TM6.D1RO
Shape Insert	TM6.D1**

SLITTING TOOL PUNCH

SLITTING TOOL PUNCH BLADES					
Punch Blade	Shear	Size	Standard	Add On	
				TiCN	KPM
	Rooftop	5*30 mm [0.197'*1.181"]	TQD.P1RE.		
		5*56 mm [0.197'*2.205"]			
		5*76.2 mm [0.197'*3.000"]			
SLITTING TOOL PUNCH HOLDER					
Code No.	TQD.P9				

SLITTING TOOL DIE

SLITTING TOOL DIE BLADES

Die Blade Type	Style	Shape	Size	Standard
	A-Solid	Rectangle	5*30 mm [0.197'*1.181"] ~ 5*56 mm [0.197'*2.205"]	TQD.D1RE.
	A-Slitting			TQD.D2RE.
	B-Solid		5*30 mm [0.197'*1.181"] ~ 5*76.2 mm [0.197'*3.000"]	TQD.D3RE.
	B-Slitting			TQD.D4RE.

SLITTING TOOL DIE HOLDERS

Die Holder	Description	Type	Blade Size	Code No.
	Standard	A	5*30 mm [0.197'*1.181"] ~ 5*56 mm [0.197'*2.205"]	TQD.D6
		B	5*30 mm [0.197'*1.181"] ~ 5*76.2 mm [0.197'*3.000"]	TQD.D7
	Brush	A	5*30 mm [0.197'*1.181"] ~ 5*56 mm [0.197'*2.205"]	TQD.D8
		B	5*30 mm [0.197'*1.181"] ~ 5*76.2 mm [0.197'*3.000"]	TQD.D9

STANDARD

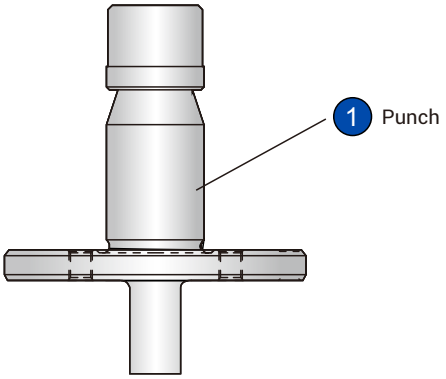

QUICK-ALIGN

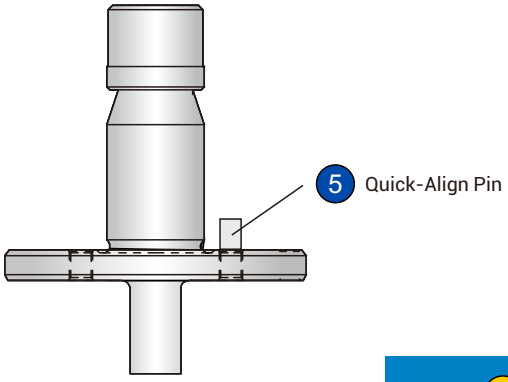

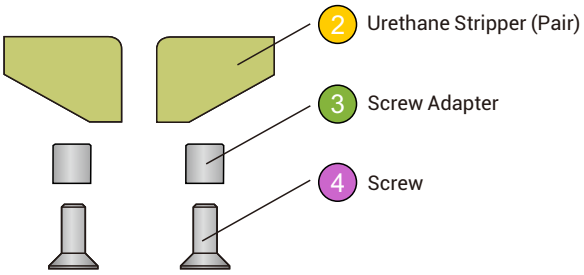

2 URETHANE STRIPPER

Size	2C	2D
Model	W=2TK II SE-3C	W=3TK II SE-3D
	W=3TK II SE-3C	W=4TK II SE-3D
	W=5TK II SE-3C	W=5TK II SE-3D

2C SELF STRIPPING

Type	Shape	Self-Stripping Configurations	Parts				
			50.81 ~ 60.00 mm [2.000" ~ 2.362"]				
			Punch Assembly	Punch	Stripper	Screw Adaptor	Screw
	Rectangle	Standard	T2C.P2RE.	T2C.P9RE.	T2C.P8	T2C.P7	P.M4*12A
		TiCN	T2C.P2TRE.	T2C.P9TRE.			
		Quick-Align	T2C.P2QRE.	T2C.P9QRE.			
		TiCN	T2C.P2QTRE.	T2C.P9QTRE.			

2D SELF STRIPPING

Type	Shape	Self-Stripping Configurations	Parts				
			60.01 ~ 76.20 mm [2.362" ~ 3.000"]				
			Punch Assembly	Punch	Stripper	Screw Adaptor	Screw
	Rectangle	Standard	T2D.P2RE.	T2D.P9RE.	T2D.P8	T2D.P7	P.M4*12A
		TiCN	T2D.P2TRE.	T2D.P9TRE.			
		Quick-Align	T2D.P2QRE.	T2D.P9QRE.			
		TiCN	T2D.P2QTRE.	T2D.P9QTRE.			

QUICK-ALIGN

QUICK-ALIGN PUNCH

Type	Dimension	Geometry	Standard	Shear		Add On	
				Whisper	Rooftop	TiCN	KPM
1	Short Punch ≤30.00 mm [1.181"]	Round					
		Shape					
	Long Punch ≤30.00 mm [1.181"]	Round					
		Shape					
2C	≤60.00 mm [2.362"]	Round					
		Shape					
2D	≤76.2 mm [3.000"]	Round					
		Shape					

HEAVY DUTY

HEAVY DUTY PUNCH

Type	Dimension	Geometry	Standard	Shear		Add On	
				Whisper	Rooftop	TiCN	KPM
Size I	≤30.00 mm [1.181"]	Round	T1X.P2RO.				
		Shape	T1X.P2S**.				
Size II	≤42.00 mm [1.654"]	Round	T2X.P2RO.				
		Shape	T2X.P2**.				

HEAVY DUTY DIE

Size I	≤30.00 mm [1.181"]	Round	T1X.D3RO.
		Shape	T1X.D3**.
Size II	≤42.00 mm [1.654"]	Round	T2X.D3RO.
		Shape	T2X.D3**.

HEAVY DUTY ALIGNMENT RING

Alignment Ring	T3X.T1

FULLY GUIDE CUTTING TOOL

FULLY GUIDED PUNCH ASSEMBLY			
Material	**Hardness**	**Maximum Tip Length**	**Tip Width Range**
High Speed Steel	HRC 63° ± 1	28 mm [1.102"]	1.0 ~ 1.5 mm [0.040" ~ 0.059"]

FULLY GUIDED DIE
Heavy Duty Die

FULLY GUIDED USING RECOMMENDATION		
Material	**Maximum Thickness**	**Overview**
Mild Steel	1.5 mm [16 gauge]	We only recommend thin material applications.

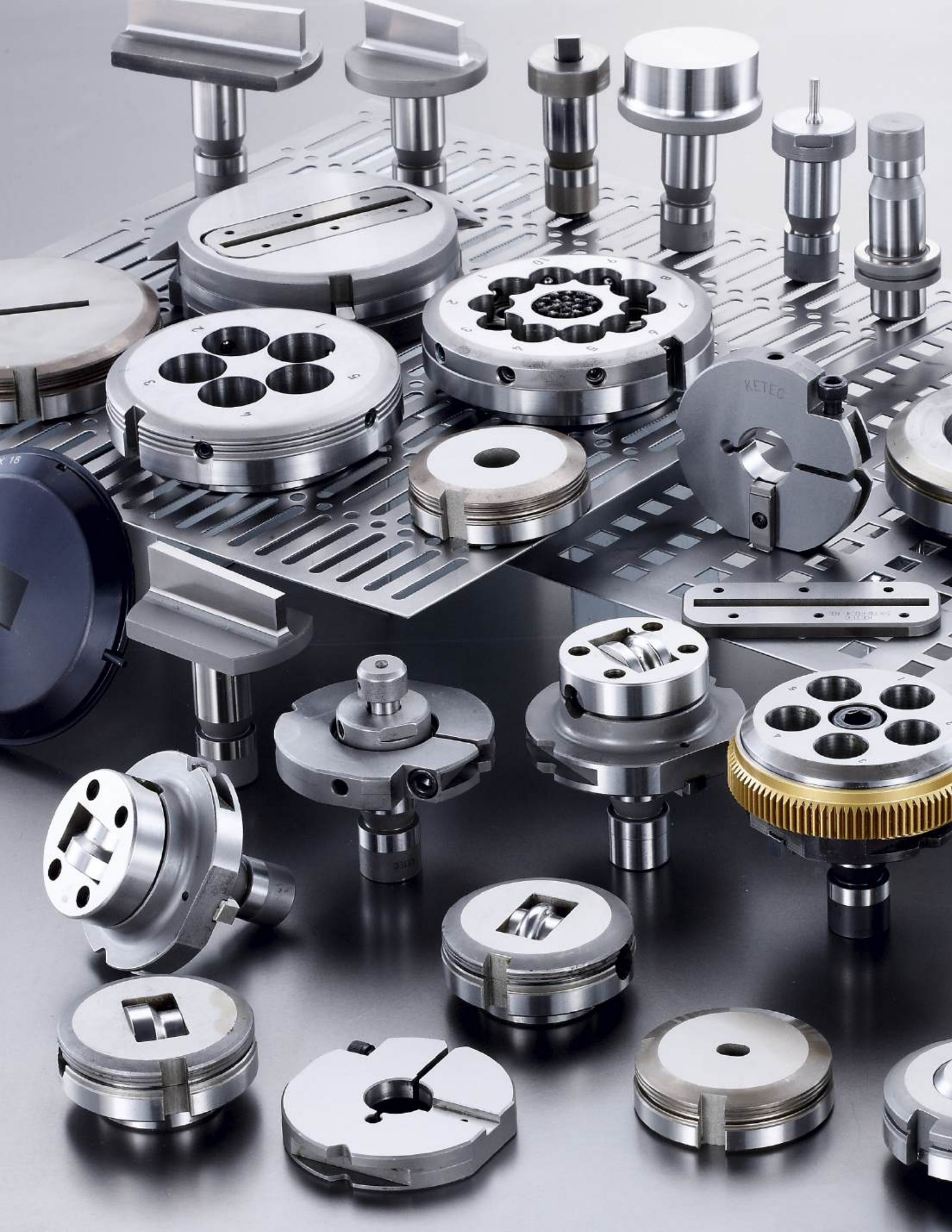
KETEC

BRIDGE (SINGLE, DOUBLE)

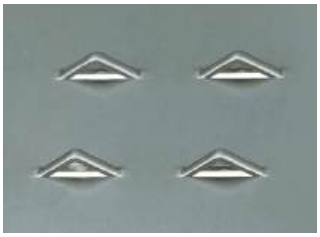

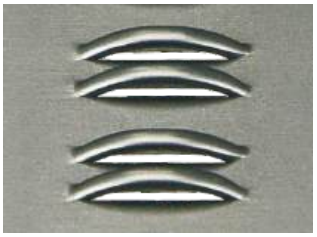

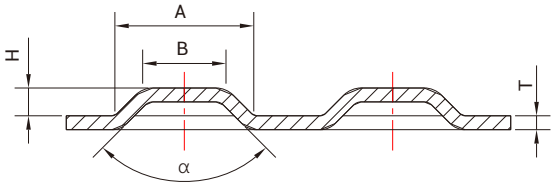

Form Up

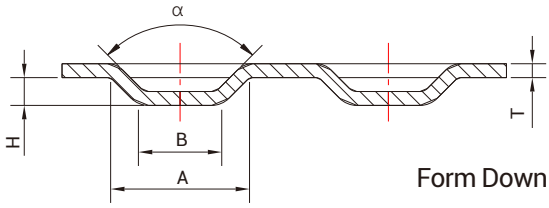

Form Down

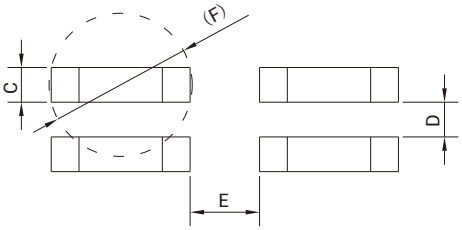

Single Bridge

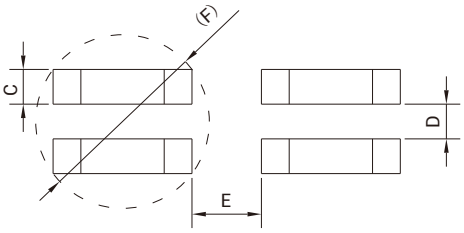

Double Bridge

ORDER INFORMATION

Machine Model		
Material		
Thickness		
Angle (α)		
Height (H)		
Dimension (A)		
Dimension (B)		
Dimension (C)		
Dimension (D)		
Dimension (E)		
Dimension (F)		
Forming Direction	Form Up	☐
	Form Down	☐

CARD GUIDE

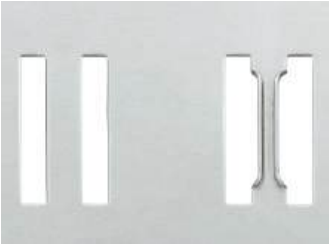

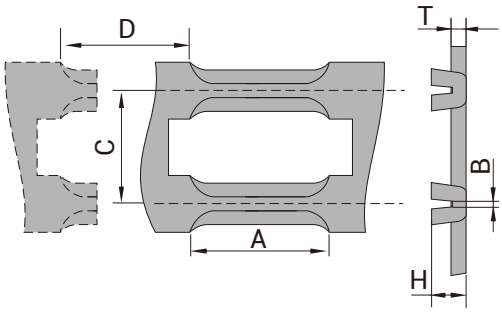

- Replace the inserts for different sizes.
- Forming height: H≤2T.
- Direction: Form up only.

ORDER INFORMATION	
Machine Model	
Material	
Thickness	
Height (H)	H ≤ 2T
Dimension (A)	
Dimension (B)	
Dimension (C)	
Dimension (D)	

CENTER POINT

Form Up

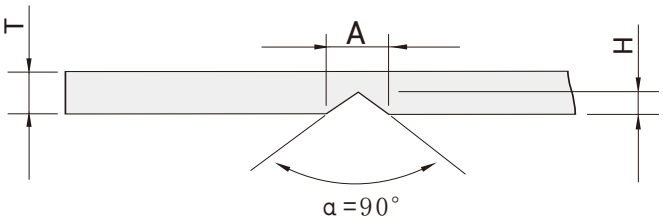

Form Down

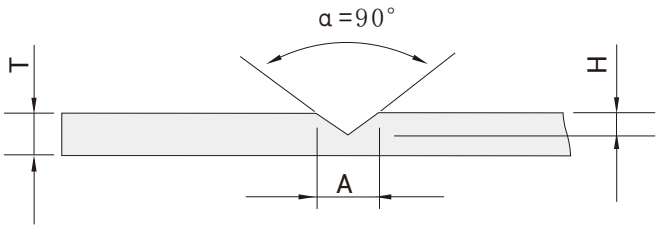

ORDER INFORMATION		
Machine Model		
Material		
Thickness		
Angle (α)		
Height (H)		
Dimension (A)		
Forming Direction	Form Up	☐
	Form Down	☐

COUNTERSINK

C1 TYPE COUNTERSINK

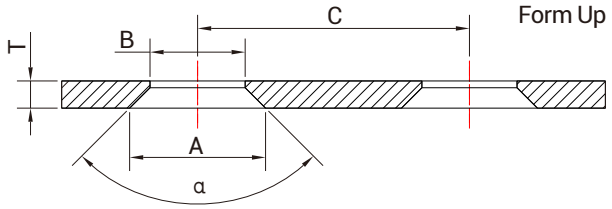

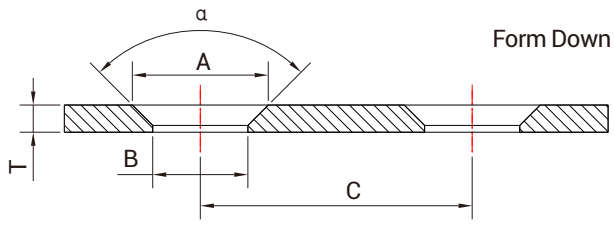

C2 TYPE COUNTERSINK

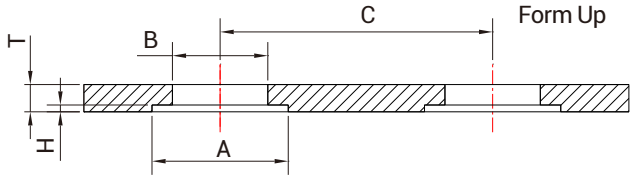

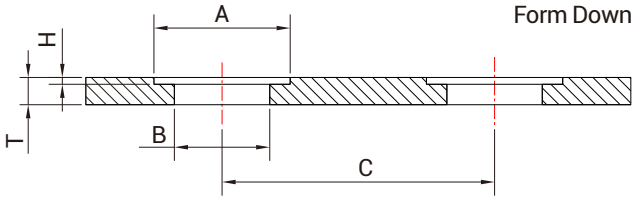

ROUND COUNTERSINK

Also for standard
M4 / M5 ... screws.

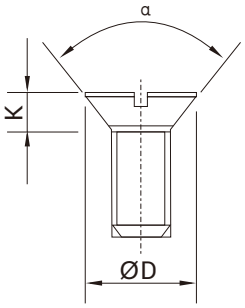

SHAPE COUNTERSINK

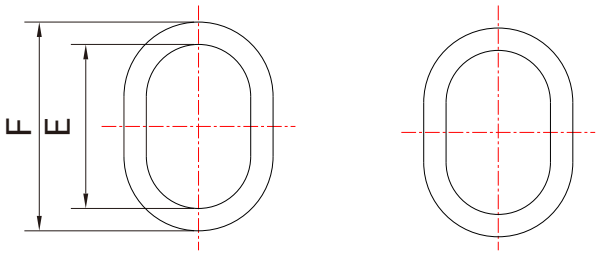

ORDER INFORMATION

Machine Model		
Material		
Thickness		
Angle (α)		
Height (H)		
Dimension (A)		
Dimension (B)		
Dimension (C)		
Forming Direction	Form Up	☐
	Form Down	☐

EMBOSS

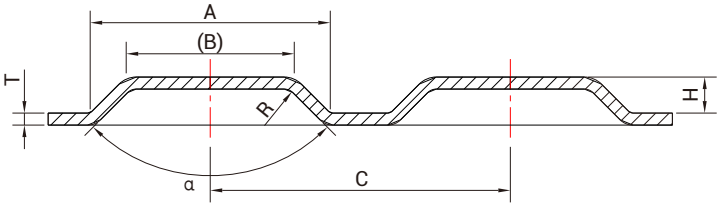

Form Up

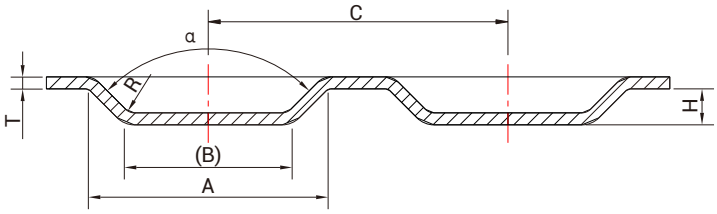

Form Down

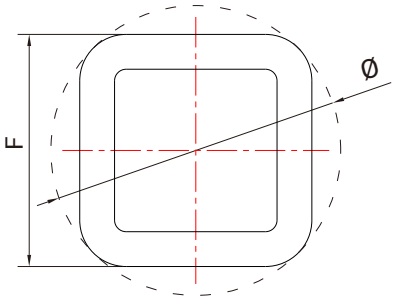

Shape Emboss

Round Emboss

Shape Emboss

ORDER INFORMATION	
Machine Model	
Material	
Thickness	
Radius (R)	
Angle (α)	
Height (H)	
Dimension (A)	
Dimension (B)	
Dimension (C)	
Dimension (F)	Shape Emboss
Diameter (Ø)	Shape Emboss
Forming Direction	Form Up ☐
	Form Down ☐

EMBOSS COUNTERSINK

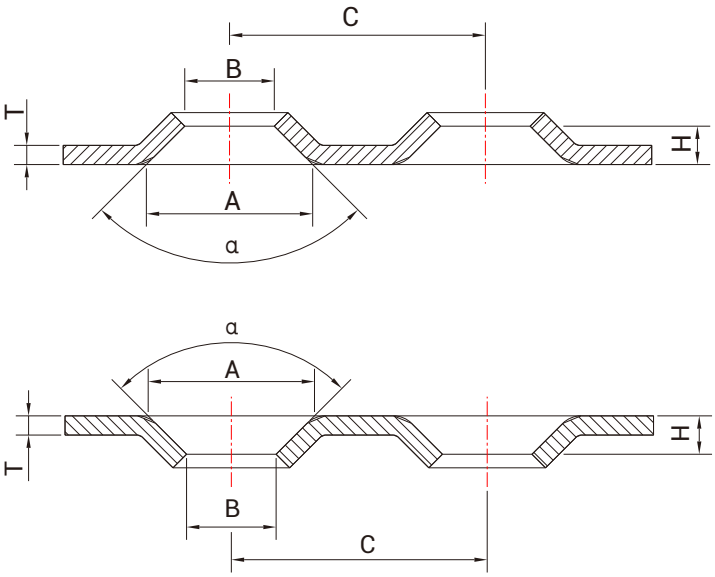

Form Up

Form Down

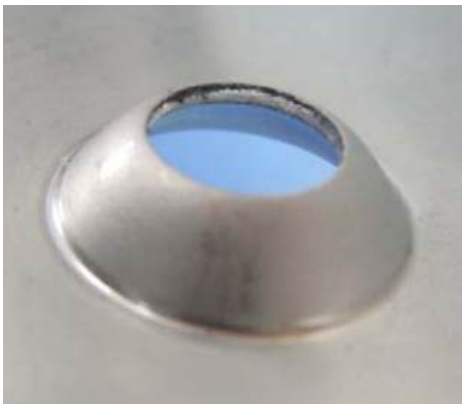

ORDER INFORMATION	
Machine Model	
Material	
Thickness	
Angle (α)	
Height (H)	
Dimension (A)	
Dimension (B)	
Dimension (C)	
Forming Direction	Form Up ☐
	Form Down ☐

EXTRUSION

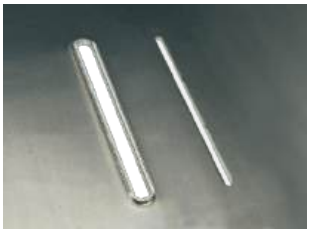

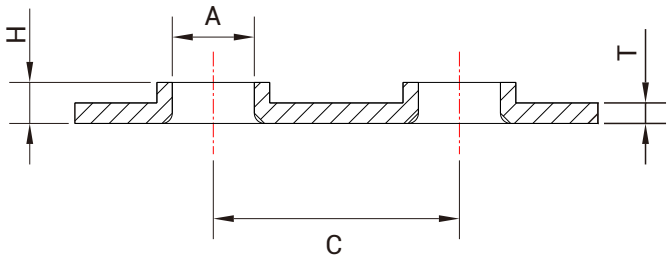

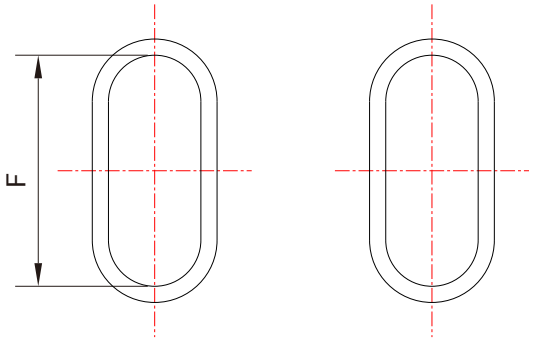

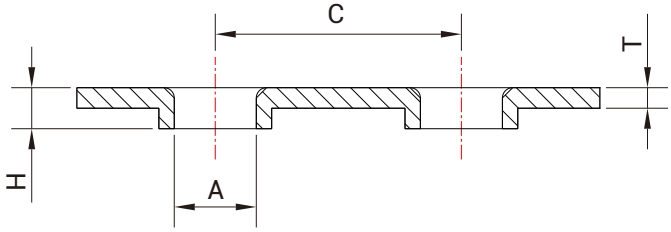

ORDER INFORMATION		
Machine Model		
Material		
Thickness		
Height (H)		
Dimension (A)		
Dimension (C)		
Dimension (F)	Shape Extrusion Only	
Forming Direction	Form Up	☐
	Form Down	☐

EXTRUSION TAPPING

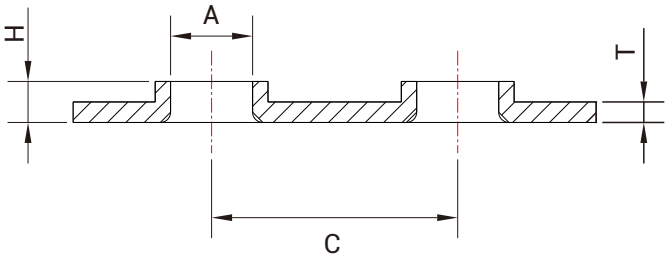

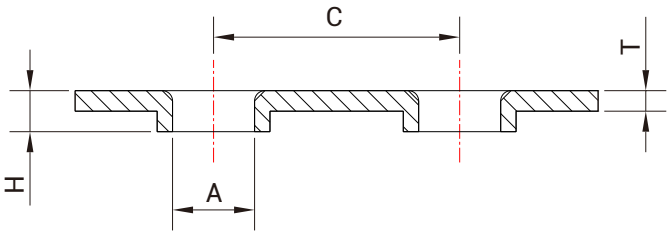

Pre-punch Size for Stainless Steel

mm [inches]

Extrusion Tapping		Thickness			
Dimension	ØA	0.6	0.8	1.0	1.2
M2.6	2.21 [0.087]	1.3 [0.051]	1.3 [0.051]	1.3 [0.051]	
M3	2.60 [0.102]	1.3 [0.051]	1.3 [0.051]	1.6 [0.063]	1.8 [0.071]
M4	3.40 [0.134]		2.0 [0.079]	2.0 [0.079]	2.0 [0.079]
M5	4.30 [0.169]			2.3 [0.091]	2.3 [0.091]
M6	5.10 [0.200]			3.0 [0.118]	3.0 [0.118]

Pre-punch Size for Mild Steel & Aluminum

mm [inches]

Extrusion Tapping		Thickness					
Dimension	ØA	0.8	1.0	1.2	1.6	2.0	Mild steel only 2.3
M2.6	2.21 [0.087]	1.3 [0.051]	1.3 [0.051]	1.3 [0.051]	1.6 [0.063]		
M3	2.60 [0.102]	1.3 [0.051]	1.3 [0.051]	1.6 [0.063]	1.6 [0.063]		
M4	3.40 [0.134]	2.0 [0.079]	2.0 [0.079]	2.0 [0.079]	2.3 [0.091]	2.3 [0.091]	2.5 [0.098]
M5	4.30 [0.169]		2.3 [0.091]	2.3 [0.091]	2.8 [0.110]	2.8 [0.110]	3.0 [0.118]
M6	5.10 [0.200]			3.0 [0.118]	3.0 [0.118]	3.8 [0.150]	3.8 [0.150]

ORDER INFORMATION

Machine Model		
Material		
Thickness	Mild Steel 2.3mm Aluminum 2.0 mm SUS 1.2mm	
Height (H)		
Dimension (A)		
Dimension (C)		
Forming Direction	Form Up	☐
	Form Down	☐

HALF SHEAR

ROUND

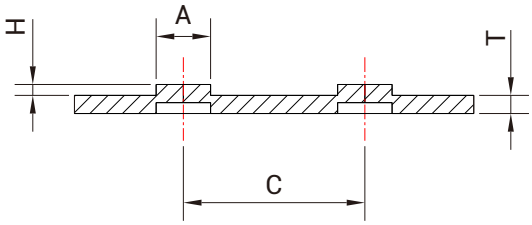

Form Up

H ≤ 0. 6 X T

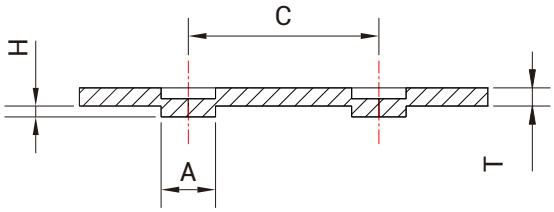

Form Down

SHAPE

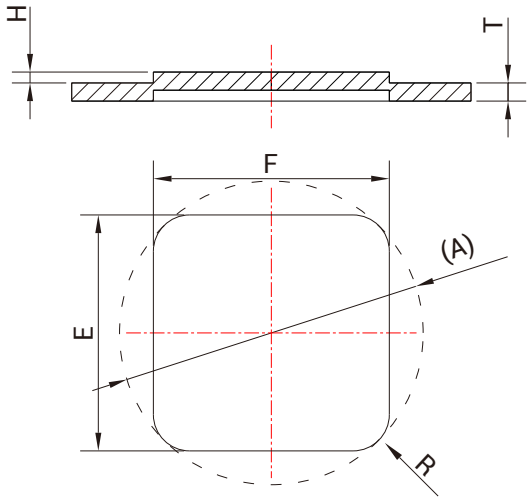

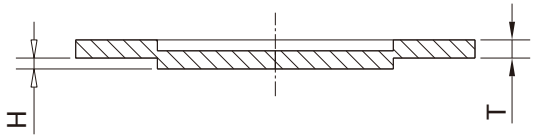

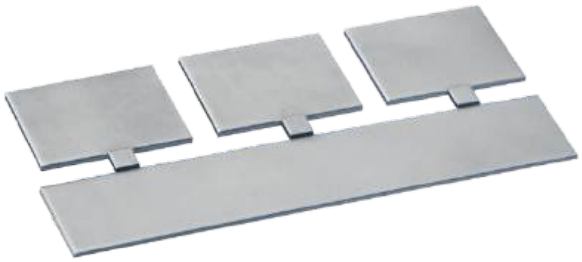

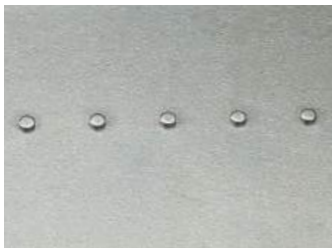

ORDER INFORMATION	
Machine Model	
Material	
Thickness	
Height (H)	H ≤ 0.6 X T

Round	Shape
Dimension (A)	Dimension (A)
Dimension (C)	Dimension (E)
	Dimension (F)
	Radius (R)
Forming Direction	Form Up ☐
	Form Down ☐

HINGE

Pre-Punch	Step 1	Step 2	Step 3
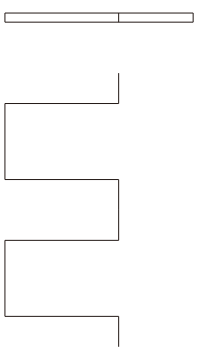	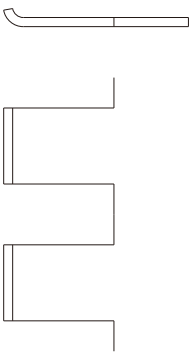	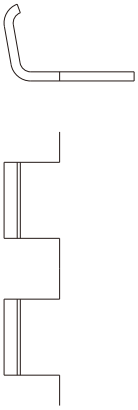	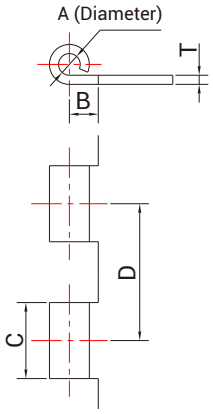

ORDER INFORMATION	
Machine Model	
Material	
Thickness	
Dimension (A)	A ≤ 5.2 mm [0.205"]
Dimension (B)	
Dimension (C)	
Dimension (D)	

KNOCKOUT (SINGLE, DOUBLE, TRIPLE, QUAD)

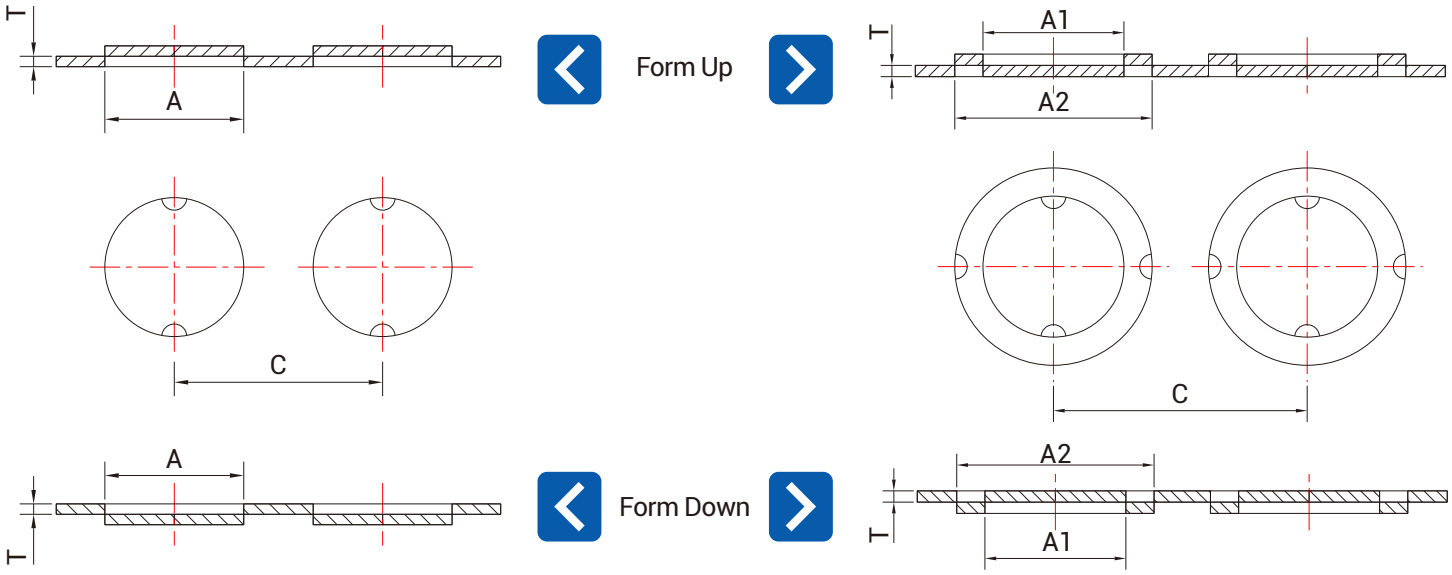

ORDER INFORMATION		
Machine Model		
Material		
Thickness		
Single Knockout	**Double Knockout**	**Triple Knockout**
Dimension (A)	Dimension (A)	Dimension (A)
Dimension (C)	Dimension (A2)	Dimension (A2)
	Dimension (C)	Dimension (A3)
		Dimension (C)
Forming Direction	Form Up	☐
	Form Down	☐

LANCE & FORM

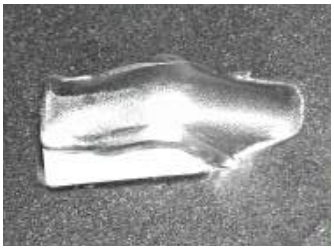
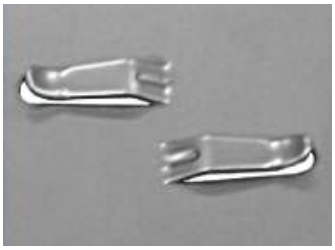

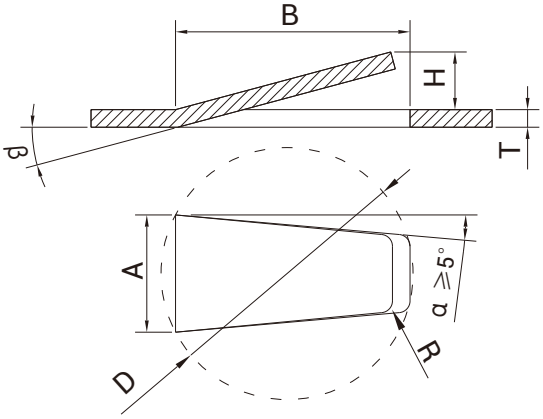

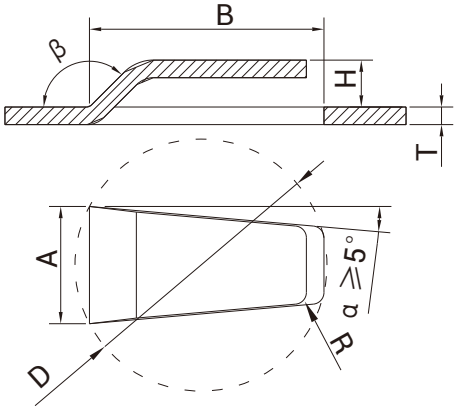

ORDER INFORMATION	
Machine Model	
Material	
Thickness	
Height (H)	
Dimension (A)	
Dimension (B)	
Dimension (D)	
Angle (β)	

LOUVER (CLOSE, OPEN, PROGRESSIVE)

CLOSE LOUVER

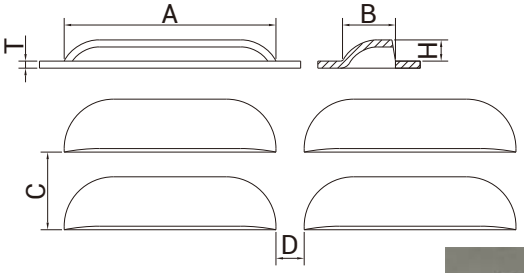

ORDER INFORMATION	
Machine Model	
Material	
Thickness	
Height (H)	
Dimension (A)	
Dimension (B)	
Dimension (C)	
Dimension (D)	

OPEN LOUVER

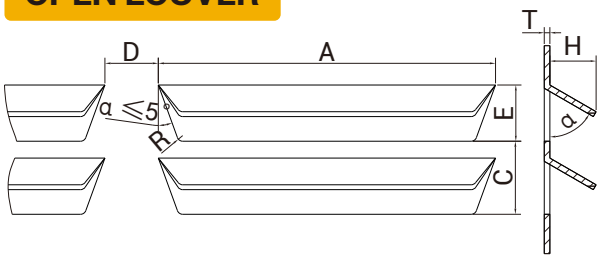

ORDER INFORMATION	
Machine Model	
Material	
Thickness	
Height (H)	
Dimension (A)	
Dimension (C)	
Dimension (D)	
Dimension (E)	

PROGRESSIVE LOUVER

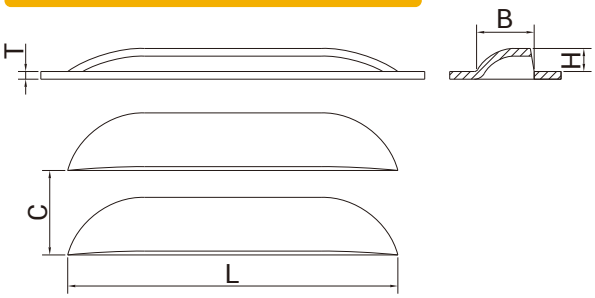

ORDER INFORMATION	
Machine Model	
Material	
Thickness	
Height (H)	
Dimension (B)	
Dimension (C)	
Dimension (L)	

MULTI-SCRIBE

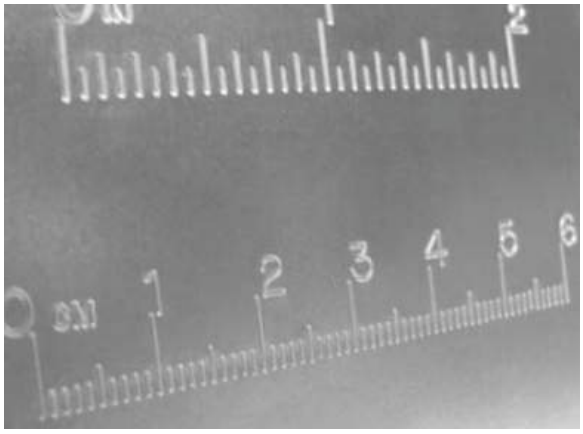

BENDING TOOL

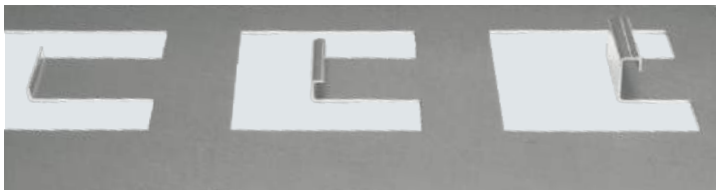

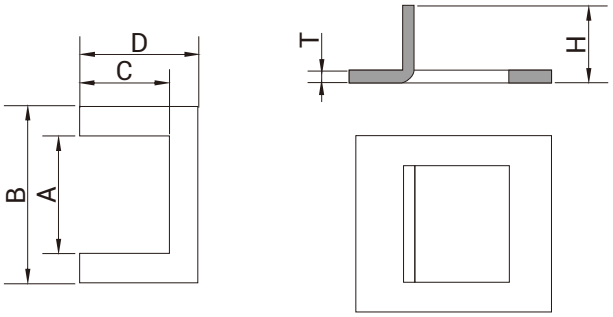

ORDER INFORMATION	
Machine Model	
Material	
Thickness	
Height (H)	
Dimension (A)	
Dimension (B)	
Dimension (C)	
Dimension (D)	

PROGRESSIVE RIB

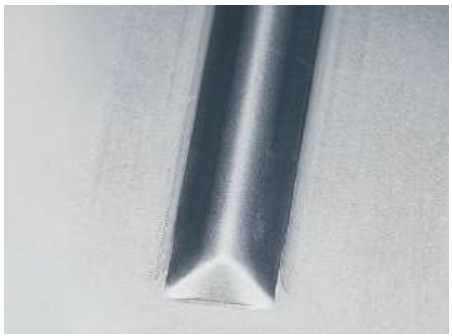

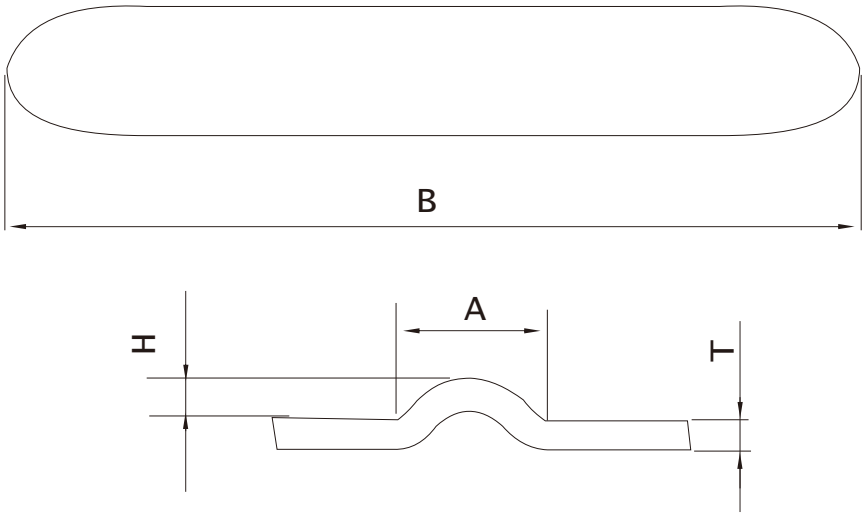

Max. thickness: 2.7mm [0.11"] (MS / AL)

2.3mm [0.09"] (SS)

Recommend ribbing step: 0.5 to 2.0mm [0.02" to 0.78"]

ORDER INFORMATION	
Machine Model	
Material	
Thickness	
Dimension (A)	
Dimension (B)	
Height (H)	

RIBBING TOOL

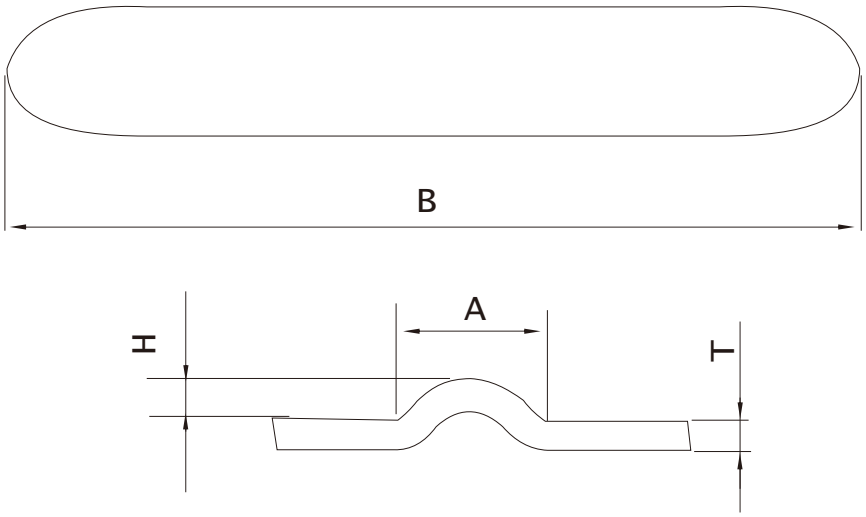

ORDER INFORMATION	
Machine Model	
Material	
Thickness	
Dimension (A)	
Dimension (B)	
Height (H)	

ROLLING OFFSET

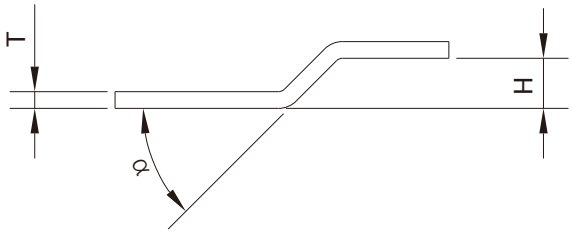

ORDER INFORMATION	
Machine Model	
Material	
Thickness	
Dimension (A)	
Minimum Travel Radius	25 mm [0.984"]
Height (H)	
Machine Option	Prerequisite

ROLLING RIB

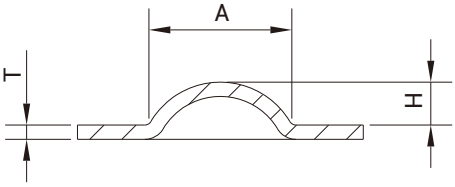

Form Up

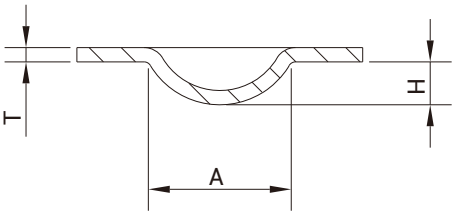

Form Down

ORDER INFORMATION	
Machine Model	
Material	
Thickness	
Dimension (A)	
Minimum Travel Radius	25 mm [0.984"]
Height (H)	
Machine Option	Prerequisite
Forming Direction	Form Up ☐
	Form Down ☐

ROLLING SHEAR

ORDER INFORMATION	
Machine Model	
Material	Not suitable for stainless steel.
Thickness	T ≤ 1.5 mm [16 gauge]
Minimum Travel Radius	25 mm [0.984”]
Machine Option	Prerequisite

ROLLING V-GROOVE

Double-Side V-Groove

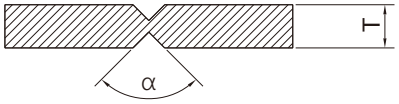

Form Up V-Groove

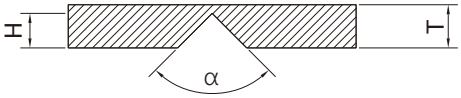

Form Down V-Groove

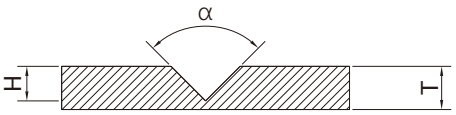

ORDER INFORMATION		
Machine Model		
Material		
Thickness		
Angle (α)		
Height (H)		
Forming Direction	Double-Side	☐
	Form Up	☐
	Form Down	☐

STAMPING (LOGO, LETTER, NUMBER, MARK)

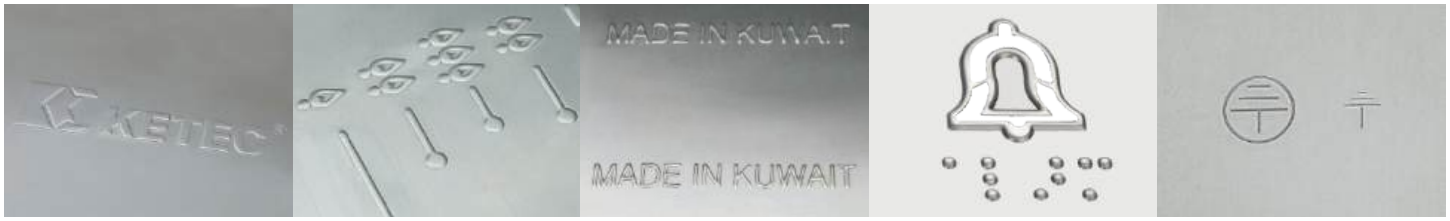

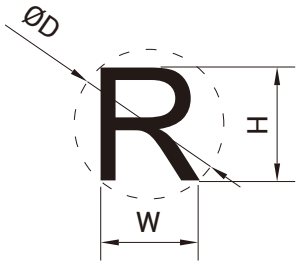

Font : MS. GOTHIC (Standard)

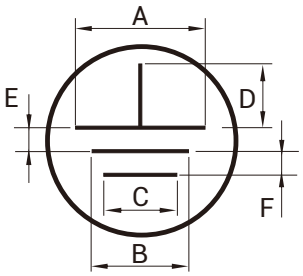

STAMPING LOGO / LETTER (EMBOSS)

ORDER INFORMATION	
Machine Model	
Material	
Thickness	
Dimension (A)	
Dimension (B)	
Height (H)	
DXF DWG Drawing	Please provide!
Forming Direction	Form Up ☐
	Form Down ☐

STAMPING MARK / EARTH MARK

ORDER INFORMATION	
Machine Model	
Material	
Thickness	
Dimension (A / B / C)	
Dimension (D / E / F)	
Height (H)	
DXF DWG Drawing	Please provide!
Forming Direction	Form Up ☐
	Form Down ☐

THREAD FORM

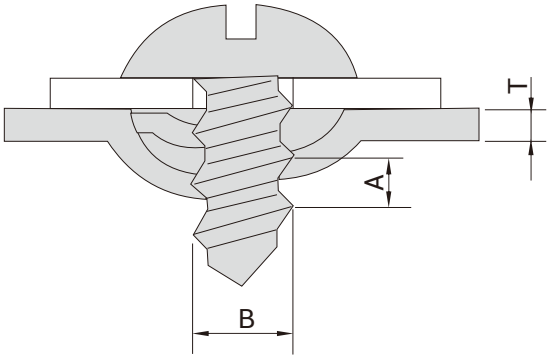

ORDER INFORMATION	
Machine Model	
Material	
Thickness Range	0.5 mm ~ 1.2 mm
Dimension (A)	
Dimension (B)	
Forming Direction	Form Up ☐
	Form Down ☐

THREAD LOOP

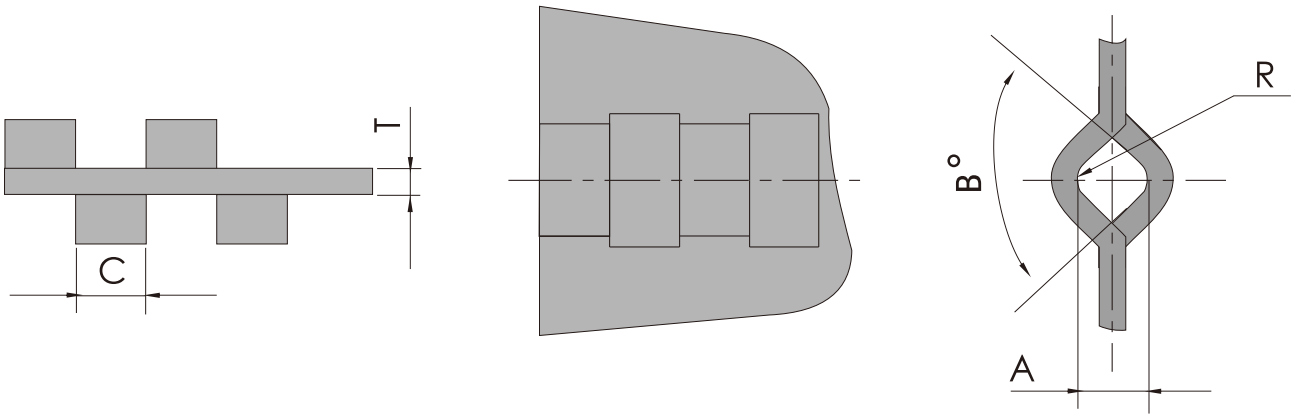

ORDER INFORMATION	
Machine Model	
Material	
Thickness	
Dimension A	
Dimension C	
Angle B	
Radius R	

SPECIAL FORMING

TEARDROP SHAPE (EMBOSS)

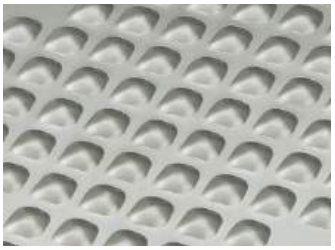

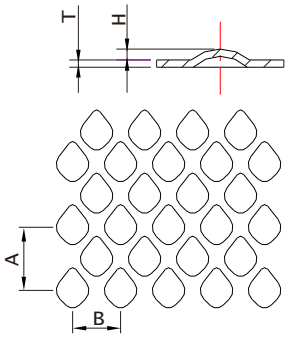

ORDER INFORMATION			
Machine Model		Dimension (A)	
Material		Dimension (C)	
Thickness		Height (H)	
Forming Direction	Form Up ☐	Form Down ☐	

WOVEN SHAPE (EMBOSS)

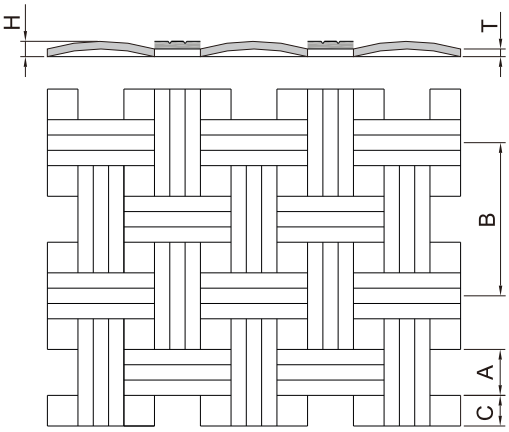

ORDER INFORMATION			
Machine Model		Dimension (A)	
Material		Dimension (C)	
Thickness		Height (H)	
Forming Direction	Form Up ☐	Form Down ☐	

CARTRIDGE

Description	Code No.
For 1000 Model	J.DJ-T1000
For 3000 / 5000 Model	J.DJ-T3000
For Size 5	J.DJ-TS5

ADAPTER

Description	Code No.
Adapter	T1X.G1

DIE PLATE

Description	Code No.
Die Plate	J.MH-T1

C-RING

Description	Machine Model	Code No.
C-Ring	2000 / 2020	J.CH-T
	1000	J.CH-T1000
	3000	J.CH-T3000

INSERTION TOOL

Description	Code No.
Insertion Tool	J.IT-T1

ALIGNMENT RING

SIZE 0 & SIZE I	
Description	Code No.
Alignment Ring	T1X.T1
Key	T1X.T9
Screw	P.M6*35A
Screw	P.M3*12B

SIZE II	
Description	Code No.
Alignment Ring	T2X.T1
Key	T1X.T9
Screw	P.M6*35A
Screw	P.M3*12B

HEAVY DUTY	
Description	Code No.
Alignment Ring	T3X.T1
Key	T1X.T9
Screw	P.M6*25A
Screw	P.M4*10A

TOOLS TROLLEY

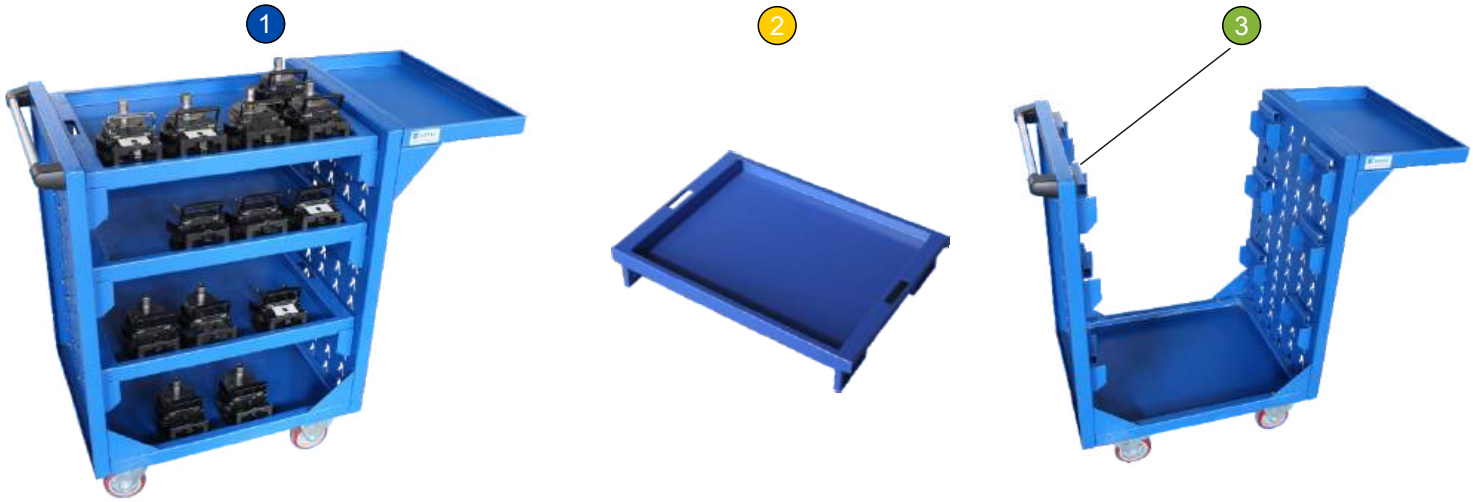

TOOLS TROLLEY			
No.	**Part**	**Code No.**	**Description**
1	Trolley	J.MJC.TKMK	4 layers, loading total 32 full sets of punches, dies and strippers with cartridges.
2	Layer shelf	J.MJC.CJ	Loads 8 full sets of punches, dies and strippers with cartridges.
3	Rack	J.MJC.ZJ	Totally 12 pieces of layer shelf racks.

DIMENSION			
Package Dimension	L x W x H: 115 x 60 x 100 cm [45.28" x 23.62" x 39.37"]	**Gross Weight**	56 kg / 123.46 lbs

PUNCHING PROCESS

1. The stripper plate presses the sheet tightly.
2. The punch contacts the sheet, and the sheet begins to deform.
3. The punch and die begin to sheer the sheet.
4. The sheet begins to tear.
5. The punch reaches the bottom.
6. The punch retracts, and the slug falls freely.

1 Punch
2 Stripper Plate
3 Sheet
4 Die

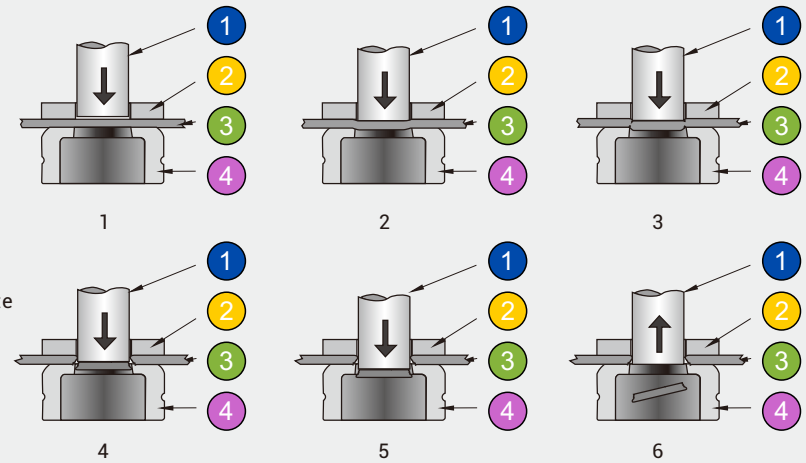

PUNCH SHEAR

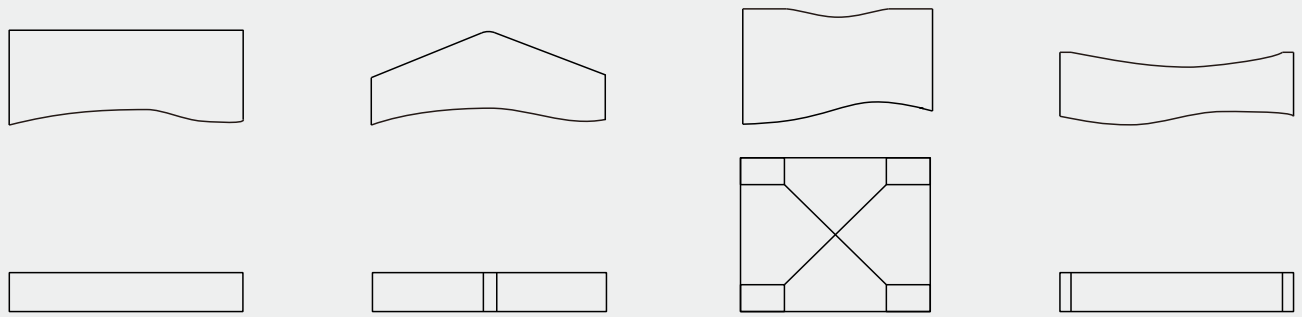

Horizontal Shear | Rooftop Shear | Quad Concave Shear | Double Concave Shear

STANDARD SHAPE DIMENSION

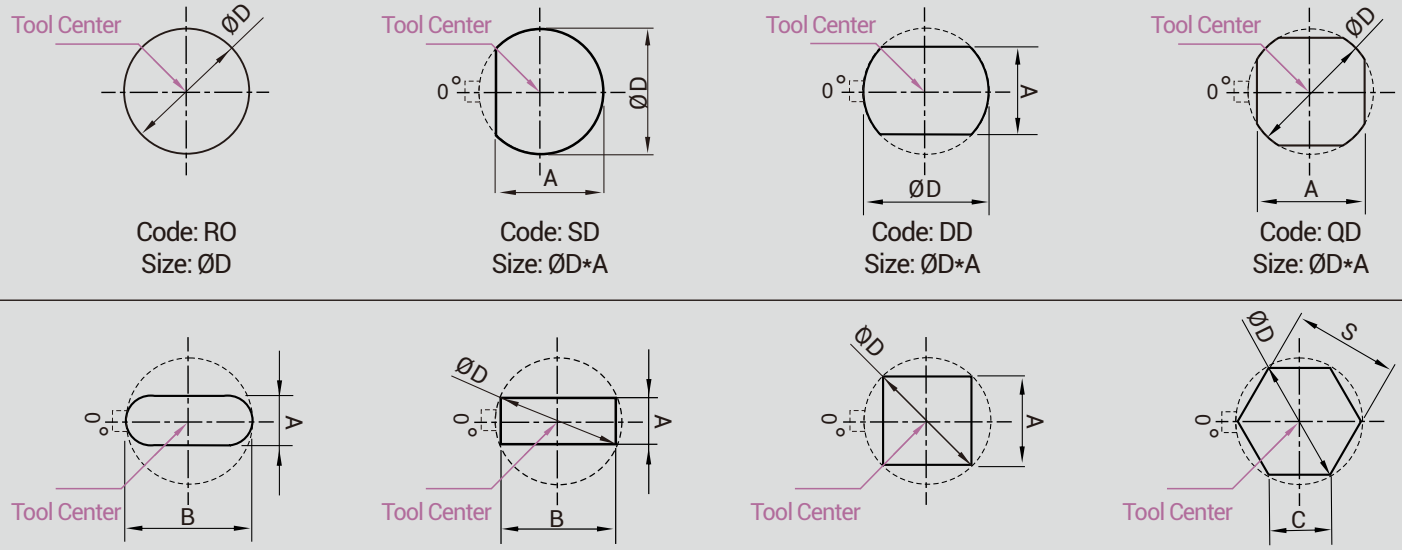

Code: RO
Size: ØD

Code: SD
Size: ØD*A

Code: DD
Size: ØD*A

Code: QD
Size: ØD*A

Code: OB
Size: ØA*B

Code: RE
Size: A*B

Code: SQ
Size: A*A

Code: HX
Size: S

ABRASION LEVEL & PUNCH HITS

The relationship of Abrasion Level & Punch Hits

A: Initial abrasion stage

B: Normal abrasion stage

C: Abnormal abrasion stage

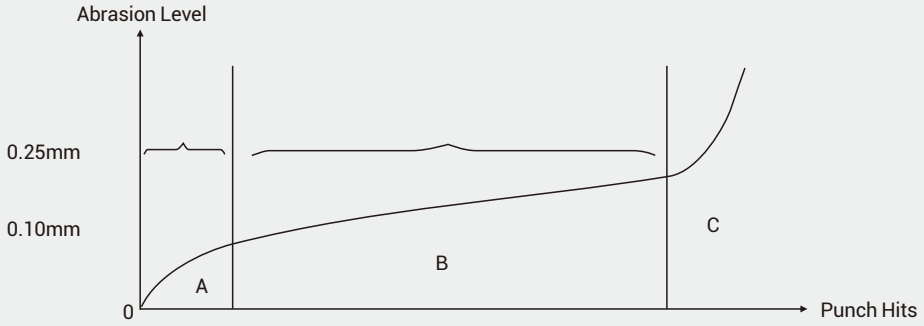

TOOLING REGRINDING INSTRUCTION

Following the correct instruction to regrind the punch, the tooling life will be extended to double.

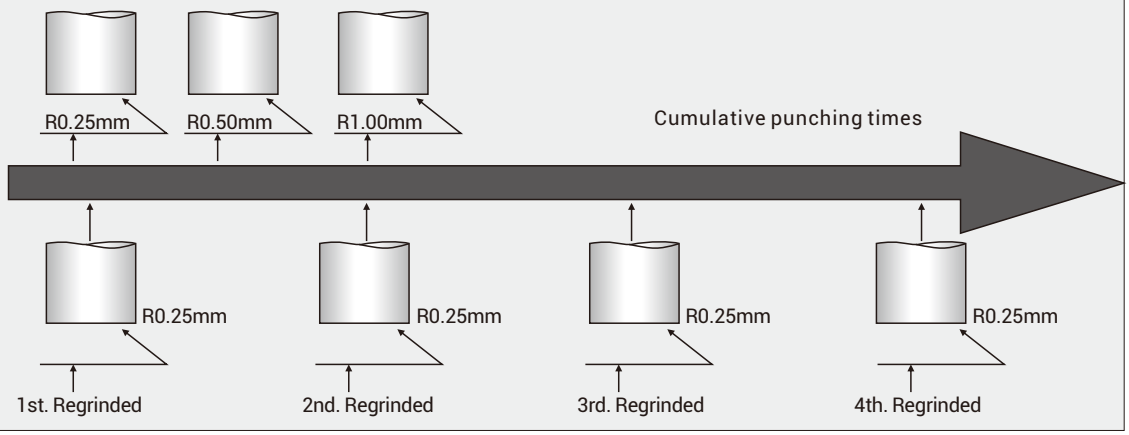

TIMING FOR REGRINDING

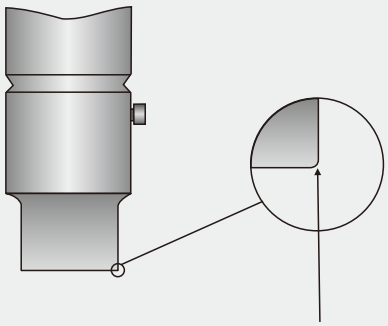

Corner radius less than 0.25mm, tooling needs regrinding.

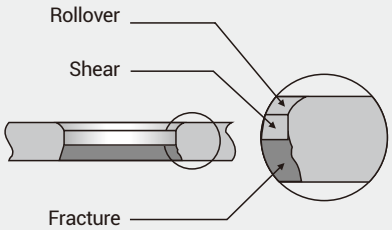

An ideal punched hole

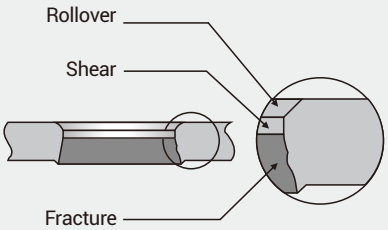

A flawed punched hole

PRECAUTIONS OF REGRINDING

Precautions:

There are various methods for sharpening tooling blades. A specialized blade sharpening machine can be used, or it can be done on a surface grinder.

When sharpening tooling blades, the following factors need to be considered:

- Choose an appropriate grinding wheel, it is recommended to use a loose, coarse-grained, soft grinding wheel, such as WA46KV.
- The grinding amount for each pass should not exceed 0.015mm. Excessive grinding can cause surface overheating, resulting in softening of the tooling or the formation of cracks.
- Sufficient cooling must be provided, and the grinding wheel should be kept sharp.
- The punch and lower die should be kept stable and fixed, using specialized fixtures and tooling.

CALCULATION OF PUNCHING FORCE

Punching force (KN) =Shape Perimeter (L) X Thickness (T) X 0.345 X Material Factor X Shear Fator

e.g. SQ40*40, T=3.0mm, SPCC, Flat shear

Punching force = (40X4)C3.0C0.345X1.2X1.0=198.72 (KN). [19.9 tons]

If the thickness of the sheet metal pate is greater than or equal to 3mm, the punching force needs to be calculated to determine:

1. whether the required punching force exceeds the machine's rated nominal force.

2. whether the required punching force exceeds the pressure-bearing capacity of the punch's weakest part.

The punching force can be reduced by altering the punch edge structure, changing the station, or using heavy duty tooling to avoid damage to the tool or the machine.

SELECTION OF DIE TYPE

The four different die styles as offered by KETEC are illustrated in below:

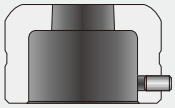
Positive taper

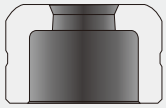
Negative taper

Slughugger Style

Stairs

Positive taper
This is the best style of die for punching holes of less than 0.236" [6mm] diameter in mild steel and stainless steel, or less than 0.472" [12mm] diameter in aluminum. Use of this style of die can result in slug pulling.

Negative taper
Although the taper is only 0.0005" [0.01mm], this is enough to help squeeze and hold the slug as its pushed down into the die land, thus helping to prevent slug pulling. Negative taper is not recommended for punching aluminum or plastic because of slug packing.

Slughugger Style
This is the only guaranteed method of stopping slug pulling and is especially recommended for use with modern punch presses due to the high punching speed.

RECOMMENDED VALUE OF DIE CLEARANCE

Sheet material:
Different materials have varying hardness and ductility, which affects the required clearance. Softer materials generally require smaller clearances, while harder materials need larger clearance.

Sheet thickness:
As the thickness of the sheet increases, the required die clearance should also increase to accommodate proper cutting or forming without causing damage to the tooling or material.

Die clearance:
The clearance between the punch and die should be appropriately set based on the sheet material and thickness to ensure clean cuts, prevent excessive wear, and avoid issues like burrs or deformation.

In general, as the sheet thickness increases, the clearance should also increase proportionally to maintain the quality of the process.

Thickness (T) / Material	0.8	1.0	0.8	0.8	2.5	3.0	3.2	3.5	4.0	4.5	5.0	5.5	6.0
Aluminum	0.12	0.15	0.2	0.3	0.35	0.45	0.48	0.53	0.6	0.68	0.75	0.83	0.9
SPCC, Mild Steel	0.15	0.2	0.3	0.4	0.5	0.6	0.65	0.7	0.8	0.9	1	1.1	1.2
Stainless Steel	0.15	0.2	0.35	0.45	0.5	0.6	0.65	0.7	0.8				

MACHINE GROUPS

GROUP A	GROUP B	GROUP C	GROUP D	GROUP E
			TRUMATIC	SUNIMAT400
				TRUMATIC
CN 700	CN 901E	CN 1200S	20	150K
CN 900	CN 902	CN 1200A	20A	151K
CN 701	CS 75	CS 15	202M	152K
CN 901	CS 75.2	CS 20		180K
		CS 20A		180.2K
		MP 25		180KD
		MP25D		180LK
				180.2LK
				202K
				225K
				235K
				300K
				300LK
				300PK
				400K

GROUP F	GROUP G	GROUP H	GROUP I	GROUP S
	TRUMATIC	TRUMATIC	TRUMATIC	MINIMATIC
				100
150W	20AW	20AW	2000R	TRUMATIC
152W	202W	202W	2010R	120R
180W	300W	300W	2020R	160R
180.2W	300LW	300LW	3000-1300R	
180R	300PW		3000-1600R	
180LW	300TOP		5000R	
180.2LW	400W		6000R	
ELX / SWIFT			1000R	
185				
240				
240R				
250				
260R				

TOOLING PURCHASE INFORMATION FORM

Item	Machine Model	Tooling Part	Shape / Size	Description	Drawing No.	Quantity	Remark

KETEC®

Precision Meets Perfection, Economical Solutions.

Phone number

North America
+1 (339) 233-4347 (Charlie Qi)

China
+86 (20) 37965500 (Christy Wen)
+86 188-1981-5253 (Simon Tam)

Email

North America
Charlie.q@ketectooling.com

China
International@ketectool.com
Simon.t@ketectooling.com

WhatsApp

+1 518-837-1464 (North America)
+86 188-1981-5253 (International)

Fax

+86 (20) 3796 5393

Address

North America
154 Wells Ave, Newton, MA, 02459, USA.

China
No.7 Lifeng Road, Mingzhu Industrial Park, Conghua
Guangzhou, China. 510931.

Follow us

LinkedIn

Facebook

Twitter